MAGICLICK MAXI

Performance Lighting





DISCONTINUED

Ceiling and wall mount series. Fixtures consist of:

- Multi-step powder-coat painting process, optimized against UV rays and corrosion.
- Copper-free precision die-cast aluminum housing and ring/faceplate.
- High transmittance, internally coated, soda-lime pressed glass diffuser, thermally and chemically quenched to strengthen the impact resistance and reduce the effect of rapid temperature changes.
- The ring/faceplate is integral with the diffuser.
- Custom molded, anti-aging gasket(s).
- Stainless steel external hardware.
- Custom MCPCB utilized to maximize heat dissipation and promote a long LED life.
- Tiltable LED board mounting bracket allows for quick and easy installation.
- 100% uniform diffused light emission.
- 5-year warranty on components.
- 10-year warranty on glass.
- Input voltage: 120-277 V (50 / 60 Hz), integral 0-10 V dimming driver.
- Optional, integral, emergency battery-pack designed for a minimum operation of 90 minutes (EMPK versions).
- Standard hinge-style housing allows for a simplified installation.
- Consult factory for dimming options, custom finishes (please specify RAL color), and non-cataloged CCT (Kelvin) options.
- Polycarbonate lens option available. Consult factory for more information.
- Marine Grade finish.
- Suitable for Natatorium applications.

IP 65 · WET · cULus LISTED · DLC · 7Q · ADAi COMPLIANT · 90° · RAL · IK 08 6 J

FINISHES

- **AN-96** / Iron gray / Textured
- **GR-94** / Aluminum metallic / Textured
- **WH-87** / White / Textured
- **BK-81** / Black / Textured
- **RB-10** / Iron rust / Textured

MAGICLICK MAXI

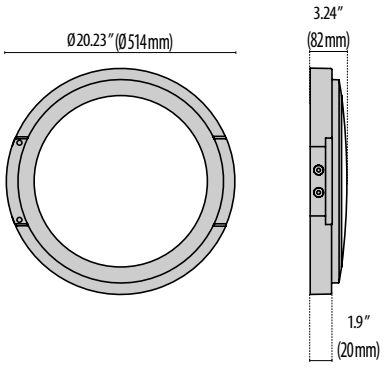

Lumen Output	27K	3K	35K	4K	5K
Magiclick Maxi 40W	1429	1474	1519	1564	1609
Magiclick Maxi 63W	2602	2684	2766	2848	2930
Magiclick Maxi EMPK	1429	1474	1519	1564	1609

Scan here for installation Instructions

Performance in Lighting reserves the rights to make all necessary changes without prior notice.

Performance in Lighting - 2621 Keys Pointe - Conyers, Georgia 30013 - USA - voice 770.822.2115 - info.usa@pil.lighting
www.performanceinlighting.com

Rev. 09/14/2026

Order Guide - MAGICLICK MAXI

Order code example | **MCM-40W-3K-AM-UNV-010V-PC**

Series	Wattage	CCT	Finish	Voltage	Dimming	Options/ Accessories
MCM Magiclick Maxi	**40W** 40 watt **63W** 63 Watt (max) **XX** Specify Wattage must be below max	80 CRI std. **3K** 3000k **35K** 3500k **4K** 4000k	**AM** Aluminum Metallic **IG** Iron Gray **IR** Iron Rust **BK** Textured Black **WH** Textured White **CC** Custom Color	**UNV** 120-277V	**010V** 0-10V Dimming Driver **ELV** 120V Line-Voltage Dimming Driver	**PC** Polycarb lens **EMPK** 40W Emergency battery back-up **TP** Tamper proof bolts **REM** 63W Remote mounted emergency battery back-up **SC** Side Conduit entry 1/2" or 1/4" "Field Mod" To be done in field

CONSULT FACTORY FOR OTHER AVAILABLE OPTIONS NOT SHOWN ABOVE

DISCONTINUED